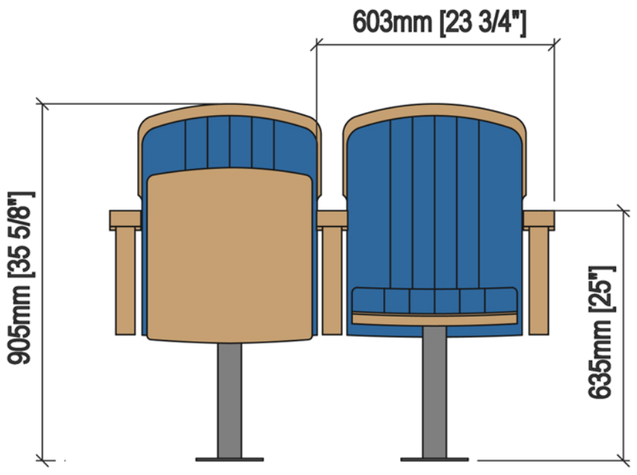
603mm [23 3/4"]
905mm [35 5/8"]
635mm [25"]

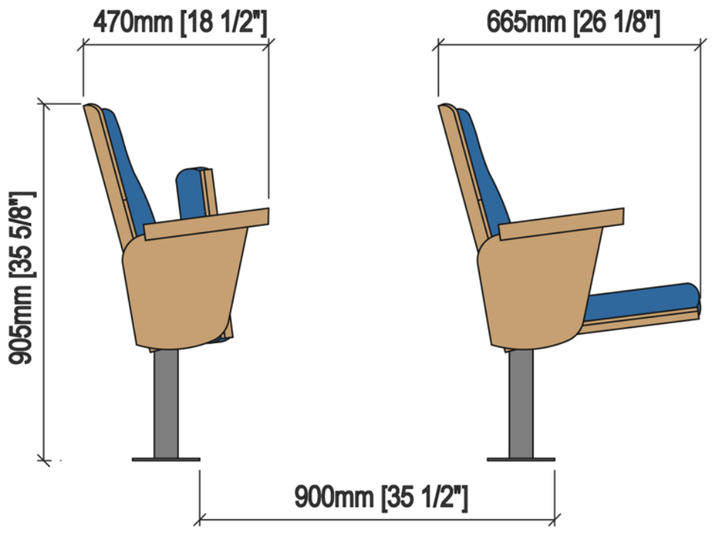
470mm [18 1/2"]
665mm [26 1/8"]
905mm [35 5/8"]
900mm [35 1/2"]

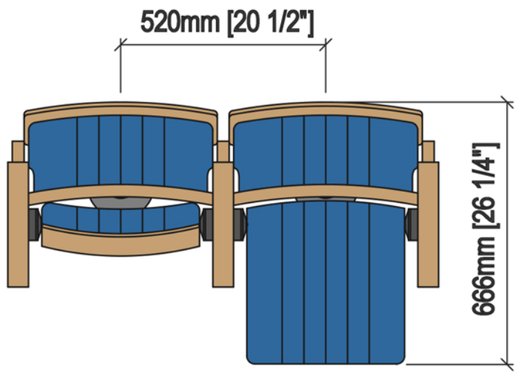
520mm [20 1/2"]
666mm [26 1/4"]